Biotechnology and Molecular Biology Reviews Vol. 4 (2), pp. 029-041, April 2009
Available online at http://www.academicjournals.org/BMBR
ISSN 1538-2273 © 2009 Academic Journals

Standard Review

Toward a comprehensive description of microbial processes through mechanistic and intelligent approaches

Pratap R. Patnaik

Institute of Microbial Technology, Sector 39-A, Chandigarh-160036, India.
IMTECH communication No. 048/2007. E-mail: pratap@imtech.res.in. Fax: +91-172-2690132/585.

Accepted 21 August, 2008

Microbial processes functioning in bioreactors under realistic conditions are subject to incomplete dispersion and the presence of noise from the environment and within the cells. These factors complicate the development of good quantitative descriptions of microbial reactors. Most analyses have therefore focused on either the intra-cellular or the extra-cellular processes, ignoring or simplifying the other facet. The resulting models are thus useful only for the intended purposes and in limited domains, but they do not include a comprehensive description of all features. These models have employed one or more of three main approaches to develop quantitative descriptions – mechanistic, cellular intelligence (or cybernetic), and artificial intelligence. Models using judicious combinations of two or more methods have wider and more versatile applicability. However, no model has accommodated both intra-cellular and extra-cellular noise in a macroscopic description of a nonideal bioreactor. Based on a review of recent studies, such a conceptual model is presented here. It combines all three approaches in a flexible design.

Key words: Microbial processes, dispersion, noise, modeling approaches, comprehensive description.

INTRODUCTION

Cellular processes are often more complex than chemical processes, even when both generate the same outputs. Many factors contribute to this complexity. At a fundamental level, living cells sustain more complex and intricate networks of reactions than many chemical reactions. Cellular reaction networks are not always completely deciphered, thus underlining their complexity and necessitating simplifying methods to formulate workable kinetic models (Gombert et al., 2000; Varner and Ramkrishna, 1999). Unlike chemical reactions, metabolic reactions are regulated by structurally and functionally complex molecules such as DNA, RNA and enzymes, many of whose concentrations are small but important. The low concentrations also make these molecules sensitive to noise at the genetic level (Kaern et al., 2005), which in turn has an impact on the observed behavior of the process (Haag et al., 2005).

Cellular metabolic processes also respond to environmental changes in ways that are difficult to capture through models constructed on chemical kinetic princeples alone. The lag phase behavior of cultures transferred from one medium to another, the responses to abrupt changes in input streams, and cellular dynamics in the presence of external noise are some examples. Such observations may however be described quantitatively by "intelligent" models. By contrast with the static nature of chemical kinetic models, intelligent models employ either inherent or artificial intelligence. Inherent intelligence is the basis of the so-called cybernetic models (Dhurjati et al., 1985; Patnaik, 2000) which attribute to living cells the ability to retain information, understand it and adjust their responses on the basis of past experience. Artificial intelligence has been invoked largely to model macro-scopic microbial behavior under the influences of noise and spatial variations in a bioreactor. Methods such as artificial neural networks, fuzzy logic and genetic algorithms then provide more faithful representations of varied cellular dynamics than mechanistic models do (Hodgson et al., 2004; Patnaik, 2006a).

While intelligent descriptions of microbial processes in bioreactors have decisive advantages over mechanistic models under realistic conditions, they have limitations too. Cybernetic models tend to be quite complex, often resulting in large sets of differential equations, and some-

times more than one cybernetic goal seems to explain the observed behavior equally well (Patnaik, 2000; Straight and Ramkrishna, 1994). A pivotal feature of cybernetic models is the presence of regulatory key enzymes, but it has not always been possible to establish a correspondence between these and the enzymes actually detected. A common criticism of artificial intelligence methods is that they are too empirical and do not incorporate the physiological features of cellular processes. Consequently, it becomes difficult to provide physical interpretations for the parameters of these models and relate them to kinetic and thermodynamic features (James et al., 2002; Lubbert and Jorgensen, 2001).

Despite their inadequacies, mechanistic models are simple and are derived through biological and physical principles. Therefore they have greater physiological closeness to internal cellular processes; as a result, their parameters can be attributed physical meaning and can be manipulated by introducing mutational, genetic or operational changes (Haag et al., 2005; Hodgson et al., 2004). Given the different strengths of mechanistic models and intelligent models, it might be useful to combine the two approaches to develop composite (or hybrid) models for microbial reactors. These composite models should, in principle, turn out to be adaptive, flexible and self-regulating like intelligent models, but also possess the fundamental biological basis of mechanistic models.

The idea of composite or hybrid models is not new. Many previous studies (Coleman et al., 2003; Galvanauskas et al., 2004; James et al., 2002; Patnaik, 2003a) have combined two or more modeling approaches to optimize and control bioreactors for different microbial cultures. However, no investigation has yet been reported of an approach that includes both intra-cellular and extra-cellular noise as well as cybernetic kinetics and bioreactor nonidealities. Since all these are important features of real microbial processes, this communication provides a perspective of how the development of existing methods of modeling can lead to such a composite descriptive framework.

NONIDEAL FEATURES OF CELLS AND REACTORS

Cellular noise and complexity

Cells synthesize products as a result of the expression of specific genes. Molecules such as DNA, mRNA and proteins are involved in gene expression. These molecules are usually present in concentrations sufficiently low for stochastic effects to become significant (Kaern et al., 2005; Raser and O'Shea, 2005). As a result, the amount of a particular protein that a gene synthesizes fluctuates from cell to cell in a population and with time for each cell. These fluctuations (termed genetic noise) arise from a number of sources but they may be categorized broadly as either (a) intrinsic or (b) extrinsic.

Intrinsic noise refers to fluctuations associated with promoter activation or deactivation and the synthesis and decay of mRNA and proteins. Extrinsic noise pertains to fluctuations in gene products such as RNA polymerase, ribosomes and certain proteins. Although external to the relevant genes, these fluctuations act on the genes, thus complicating both genetic expression and the identification of the two contributing effects. Nevertheless, Elowitz et al.'s (2002) two-reporter assay provides an elegant method to differentiate and quantify these two types of genetic noise.

While it may be possible to measure intrinsic noise and extrinsic noise and relate them to biochemical parameters (Swain et al., 2002), it still remains difficult to quantify individual repositories of intrinsic noise. Intrinsic noise may be present at any of three levels: (a) individual genes, (b) reaction pathways in a network, and (c) the cells as a whole. Each of these sources affects particular intra-cellular processes but all three interact as shown in Figure 1.

Since cellular processes involve complex networks of reactions regulated at the genetic level, they should be able to withstand stochastic effects so that the cellular machinery can function without being destabilized. In other words, cells should be sufficiently robust to both intrinsic and extrinsic noise. Complexity and robustness are inter-related, and examples abound in biological and ecological systems (Carson et al., 2006). Robustness is the maintenance of specific characteristics of system behavior in the face of perturbations (Carson and Doyle, 2002; Kitano, 2004a; Stelling et al., 2004). Kitano (2004a) has argued that complex evolvable systems are necessarily robust; since evolution is a fundamental trait of living cells, they too are robust.

Many factors contribute to robustness, of which feedback is a prominent example. While positive feedback amplifies fluctuations and negative feedback attenuates them, the former also increases phenotypic diversity in a population of cells (Becsei and Serrano, 2000; Kaern et al., 2005; Rao et al., 2002). In a heterogeneous population, different phenotypes have different survival probabilities under given environmental conditions, and this has important implications for disease control (Balaban et al., 2004). Since both negative and positive feed-back have beneficial as well as detrimental effects, it may be worthwhile to design gene networks that incorporate the helpful features of both; research on HIV (Richman, 2001) and cancer (Kitano, 2004b) indicates that this is possible.

The evolvability of living systems is also a core concept underlying cybernetic models of microbial processes. The cybernetic approach (Dhurjati et al., 1985; Varner and Ramkrishna, 1999) attributes to living cells the ability to learn from their experiences and accordingly respond optimally to changing circumstances. Cybernetic models have not only provided more faithful representations of the dynamic behavior of microbial reactors (Dhurjati et al., 1985; Hodgson et al., 2004; Namjoshi and Ramkrishna, 2001; Patnaik, 2000) but also explained uncommon patterns of behavior that were considered aberrant by mechanistic modeling approaches (Narang et al., 1997;

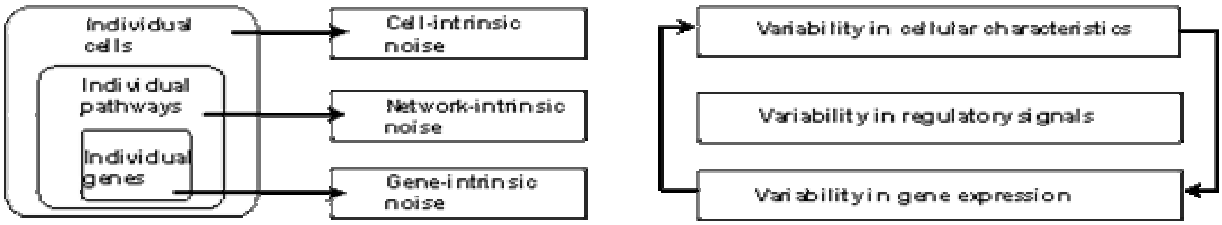

Figure 1. Noise sources inside a cell and their effects on cellular processes. Reproduced from Kaern et al. (2005) with permission from Macmillan Publishers Ltd. © 2005.

Straight and Ramkrishna, 1994). Such models have also helped to increase productivity (Patnaik, 2006a) and to suggest new feeding methods with multiple substrates to promote desired objectives (Patnaik, 2003b).

It is important to realize that the cybernetic concept is consistent with the basic premises of complex evolvable systems (Carson and Doyle, 2002; Kitano, 2004a). Both address the dynamics of complex processes and both are predicated on the Mendelian idea of evolution as a method of survival. Not surprisingly, therefore, the cybernetic framework may be used to suggest genetic modifications that will alter the rates and fluxes of path-ways in a metabolic network so that a desired objective, such as over-expression of an enzyme or suppression of a by-product, is favored (Varner and Ramkrishna, 1998).

Heterogeneity and noise in bioreactors

Populations of cells are usually cultivated in bioreactors under conditions that favor specific objectives. Typical objectives are the growth of the cells themselves, the formation of particular products, and the removal of harmful components from the environment of the cells. To achieve these objectives, it is possible to have elaborate controls of small bioreactors used in the laboratory but practical difficulties and high costs limit both measurements and control in large bioreactors. Therefore, larger reactors are less 'ideal' than small vessels and generate less of the product(s). Two significant nonideal features are: (a) spatial variations within the reactor, as a result of incomplete mixing or dispersion and (b) the influx of noise from the environment. The latter feature is obviously more likely in continuous flow and fed-batch operations; nevertheless, kinetic and thermodynamic considerations often favor the choice of such operating modes (Liden, 2001).

While spatial heterogeneity increases with reactor size, even small bioreactors can have significant gradients on a microscopic scale (Larsson et al. 1996). This makes the optimal positioning of sensors difficult and expensive. Moreover, the presence of spatial variations and the influx of noise from the environment create differences among the cells and in the distribution of fluxes along the pathways of metabolic networks, in the yields of products and sometimes in the stability of the fermentation. These effects are illustrated by numerous studies of the production of ethanol by *Saccharomyces cerevisiae* in continuous cultures (Garhyan and Elnashaie, 2004; Garhyan et al., 2003; Patnaik, 2005). Recall here that extrinsic noise also creates differences between cells in a population (Kaern et al., 2005; Raser and O'Shea, 2005). Since both extrinsic noise and external (environmental) noise have an impact on the cells, this raises an intriguing question: will the two sources of noise amplify or nullify each other? Depending on the operating conditions, either effect is possible: noise may drive a culture from a monotonic stationary state to an oscillating or a chaotic state and, alternately, proper filtering of noise can restore stable states from chaotic conditions (Garhyan and Elnashaie, 2004; Garhyan et al., 2003; Patnaik, 2006b).

The complexities described above make it difficult to formulate mechanistic models and control policies based on them that are sufficiently accurate, simple, flexible, adaptive, fast and robust. These difficulties have motivated the use of artificial intelligence (AI) methods for on-line estimations of important variables and optimal control of bioreactors. Artificial neural networks (Gadkar et al., 2005), genetic algorithms (Hodgson et al., 2004) and fuzzy logic (Arnold et al., 2002) have been used in different applications. Although they are superior to classical methods of modeling and control, AI methods are, in effect, 'black box' entities with poor physiological foundations. Not surprisingly, therefore, they are often difficult to train, do not always yield unique models and have limited capability outside their training domains. These weaknesses have generated hybrid models that combine AI or cybernetic models with mechanistic equations. Many applications of hybrid models have been reviewed recently (Galvanauskas et al., 2004). While establishing the usefulness of hybrid approaches, they also reveal areas that are still uncertain and require further inquiry. These are discussed in later sections.

A CONCEPTUAL BASIS FOR MODEL DEVELOPMENT

The formulation of a comprehensive model for a biore-bioreactor begins at the cellular level, integrates this with

the extra-cellular environment, establishes a quantitative description of this environment through mass balances, and incorporates non ideal features. The processes inside the cells themselves are sufficiently complex to require a hierarchical portrayal; Figure 2 presents such a portrait. Many studies (Dun and Ellis, 2005; Shimizu, 2002; Wang et al., 2006) have discussed cellular functions from the perspective of Figure 2, so that discussion will not be repeated here. An overriding feature of this conceptual depiction is the emergence of 'omic' structures as building blocks for intra-cellular processes. Genomics describes the primary functions at the level of genes. Ensembles of genes may differ from one genome to another, thus controlling the expression of different proteins through DNA transcription processes (transcript-tomics). The expressed proteins differ in their structures, functions, stability and interactions within individual mole-cules and between molecules; these features are the domain of proteomics.

Macroscopic manifestation of these intra-cellular facets begins at the metabolomic stage, where metabolic regulatory networks and fluxes along pathways constituting these networks are analyzed. The flux distributions are controllable and are critical to the product distributions obtained in microbial cultures. Thus metabolomics provides a vital interface between genome-level processes and those at the bioreactor level. The hierarchical structure of the 'omic' domain continues through the metabolome to the bioreactor, as illustrated in Figure 2 (Ortoleva et al., 2003; Wang et al., 2006). Note that from the microscopic to the macroscopic level the number of variables reduces from up to 10^5 (reflecting the complexity of cellular processes) to less than 10. This reduction is important because practical monitoring and control of a bioreactor can be done efficiently only with a limited number of variables.

Multi-cellular processes that differ so widely in complexity, time scales and the number of variables may understandably be described by more than one approach. Different workers have adopted different approaches and used different assumptions, according to the conditions of the system being studied and the objective. There appear to be five main approaches, with differences and similarities:

i.) Equation-oriented approach.
ii.) Signal-oriented approach.
iii.) Cellular intelligence approach.
iv.) Artificial intelligence approach.
v.) Composite (or hybrid) approach.

These are discussed below, followed by a proposal to combine some of them to formulate a composite comprehendsive model.

EQUATION-ORIENTED MODELING

The underlying premise for equation-oriented models is that biological processes follow the same laws as chemical processes. This implies that, as for chemical reactions, mass balances and kinetic equations can be formulated on the basis of measurements of inputs, outputs and intermediates. We recapitulate here that cellular systems involve reactions inside the cells and transport between (a) the cells and the extra-cellular broth, (b) through the broth itself and (c) sometimes between the broth and the external environment. On this basis two streams of modeling have evolved independently. One relates to the intra-cellular metabolic processes (Gombert and Nielsen, 2000; Varner and Ramkrishna, 1999) and the other pertains to bioprocesses (Bailey, 1998; Lubbert and Jorgensen, 2001). However, a comprehensive description of a microbial system should encompass both streams, and Haag et al. (2005) work illustrates how this may be done.

Consider a set of reactions that follow the stoichiometry

$$\sum_{i=1}^{m} \kappa_{S_i} S_i \rightarrow \sum_{i=1}^{n} \kappa_{P_i} P_i \tag{1}$$

Where S_i is the i-th substrate and P_i the i-th product. In a perfectly mixed continuous flow stirred tank bioreactor, the mass (or molar) balances for each component in the extra-cellular fluid may be written as

$$\frac{d(\bar{c}_{ex} V)}{dt} = \bar{K}_{ex} \bar{r} V + \bar{c}_{in} Q_{in} - \bar{c}_{ex} Q_{out} \tag{2}$$

where $\bar{c}_{ex}$ is the vector of exit concentrations, $\bar{c}_{in}$ the vector of inlet concentrations, Q_{in} the inflow rate, Q_{out} the outflow rate, V the volume of material in the bioreactor and t the elapsed time, $\bar{r}$ contains the rate terms for the concentrations $\bar{c}_{ex}$, and $\bar{K}_{ex}$ is a vector of stoichiometric rate constants.

Normally $Q_{out} = Q_{in}$ and hence V is constant. Then, with the dilution rate defined as $D = Q_{in}/V$, Eqn. (2) becomes

$$\frac{d\bar{c}_{ex}}{dt} = \bar{K}_{ex} \bar{r} + (\bar{c}_{in} - \bar{c}_{ex}) / D \tag{3}$$

Haag et al. (2005) also accounted for the common observation that, at any time, some cells are active (or viable) and others are inactive (or dead). Ignoring detailed mechanisms, they considered simply that, overall, dead cells (X_d) arise irreversibly from viable cells (X_v). Then the mass balances for the biomass may be expressed as:

$$\frac{dc_{x_v}}{dt} = \bar{k}_{x_v}^T \bar{r} - Dc_{x_v} = (\mu - k_d) c_{x_v} - Dc_{x_v} \tag{4}$$

$$\frac{dc_{x_d}}{dt} = \bar{k}_{x_d}^T \bar{r} - Dc_{x_d} = k_d c_{x_v} - Dc_{x_d} \quad (5)$$

Here $\bar{k}_{x_v}$ and $\bar{k}_{x_d}$ contain the respective reaction rate constants, and k_d is the rate constant for the decay of viable cells. Combining Eqns. (4) and (5), the total specific growth rate may be obtained from

$$\frac{dc_{x_{tot}}}{dt} = \frac{dc_{x_v}}{dt} + \frac{dc_{x_d}}{dt} = \mu_{tot} c_{x_v} - Dc_{x_{tot}} = \mu c_{x_v} - Dc_{x_{tot}} \quad (6)$$

The equality $\mu_{tot} = \mu$ is understandable since only viable cells contribute to the growth. Metabolic reactions inside the cells contribute to changes in the viable cell mass. Therefore, similar to Equation (2), global balances for the intra-cellular metabolites, $\bar{c}_i$, may be written as

$$\frac{d(\bar{c}_i c_{x_v} V)}{dt} = \bar{K}_i \bar{q} c_{x_v} V - \bar{c}_i k_d c_{x_v} V - \bar{c}_i c_{x_v} Q_{out} \quad (7)$$

The vector $\bar{q}$ contains the metabolic fluxes along the reaction pathways. Equation (7) may be recast in the form of Equation (3) to obtain

$$\frac{d\bar{c}_i}{dt} = \bar{K}_i \bar{q} - \bar{c}_i \mu \quad (8)$$

Since the control volume of the bioreactor alone is a closed system, the mass flows between the cells and their environment have to be balanced. This leads to

$$\bar{c}_{ex}(t) = \bar{K}_{ex} \bar{r}(\bar{c}_{ex}, \bar{c}_i) + \bar{g}_{ex}(\bar{c}_{ex}, t) \quad (9)$$

$$\bar{c}_i(t) = \bar{K}_i \bar{q}(\bar{c}_{ex}, \bar{c}_i) - \bar{c}_i \mu(\bar{c}_{ex}, \bar{c}_i) \quad (10)$$

with $\bar{g}_{ex}$ containing the terms representing exchanges with the environment outside the bioreactor. In the simplest case without gaseous inflow or outflow,

$$\bar{g}_{ex}(\bar{c}_{ex}, t) = [\bar{c}_{in}(t) - \bar{c}_{ex}(t)]D \quad (11)$$

This model is rigorous but complex. Moreover, it depends on intra-cellular concentrations, which are usually difficult to measure, and it ignores intra-cellular regulatory processes (Dhurjati et al., 1985; Ptnaik, 2000). These limitations have been exposed in studies of hybridoma cultures (Namjoshi et al., 2003; Zupke and Stephanopoulos, 1995).

SIGNAL-ORIENTED APPROACH

As an alternative to the “bag full of enzymes” (Lengeler et al., 1999) approach of equation-oriented mechanism-based modeling, the signal-oriented approach views a cell as a mosaic of function units with signals flowing between them. The content and the nature of flows determine the ultimate functions of a cell. Three biological criteria are used to demarcate these units: (i) the presence of an enzymatic network with a common physiological task, (ii) control of this network at the genetic level by a common regulatory unit, such as an operon or a regulon, usually organized in a hierarchical way, and (iii) the coupling of this regulatory network through a signal transduction system.

Based on these concepts, Kremling and coworkers (Kremling et al., 2000) proposed a signal-oriented description of cellular dynamics. They illustrated their method with *Escherichia coli*. In their application each functional unit is characterized by two “coordinates”. The structural coordinate is described by the number and type of inputs and outputs. For example, a functional unit may describe transcription processes connecting a pool of nucleotides with the RNAs. The second coordinate is behavioral and it is expressed by mathematical equations describing the structural object. As might be expected, functional units differ in their complexity and response times.

Kremling et al. (2000) also assigned to each unit an indicator molecule (called an alarmone) whose level of activity controls the activities of superimposed regulatory networks. It is worth remembering this concept in order to draw a parallel with the cybernetic approach to be described later.

Each function may be composed of one or more elemental submodels or model objects. These are basically of three types: (i) substance storages, (ii) substance transformers and (iii) signal transformers. Substance storage devices may either contain genetic information (as in the cases of DNA, RNA and proteins) and may not (e.g. intermediate metabolites). Signal transformers form the central nervous system of the signal-oriented approach. As Kremling et al. (2000) point out; they provide the crucial links between the reception of stimuli, either from inside the cells or from the external environment, and the cellular responses.

Signal transformers also help to differentiate between metabolic flows and signal flows. Metabolic networks comprise metabolic and regulatory subnetworks. The metabolic subnetwork contains the metabolic fluxes whereas the regulatory component describes the signal transduction processes. The signal-oriented approach may be illustrated by the simple example of the synthesis of a protein (Kremling et al., 2000). This requires the processes of transcription, translation and replication, which are modeled as shown in Figure 3. Each process has three components–substance storage, substance transformer and signal transformer. As seen, transcription and translation provide unidirectional signal transfer. The signal transformer of the transcription cascade processes information about DNA sequences, regulatory proteins,

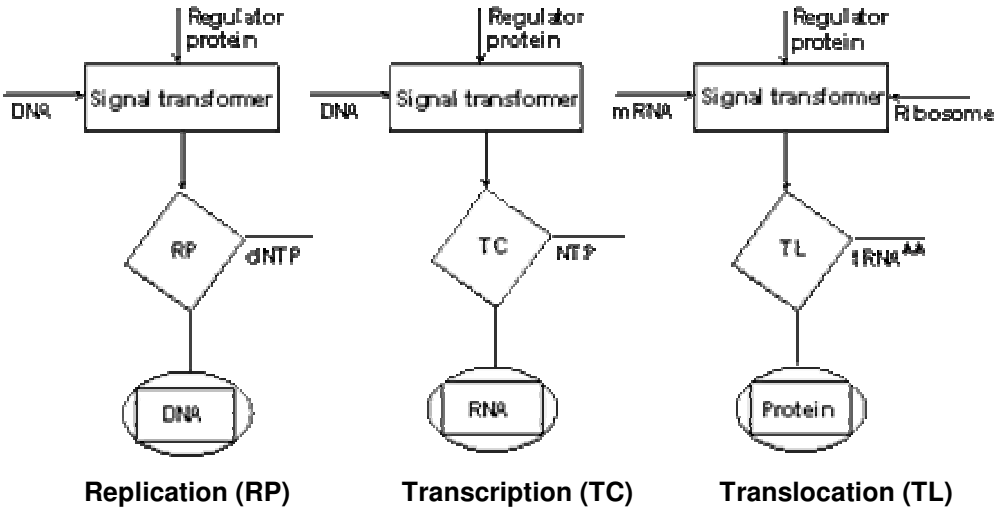

Figure 3. Signal flow depictions of the processes of replication (RP), transcription (TC) and translation (TL) in the synthesis of a protein. Reproduced from Kremling et al. (2000) with permission from Academic Press © 2000.

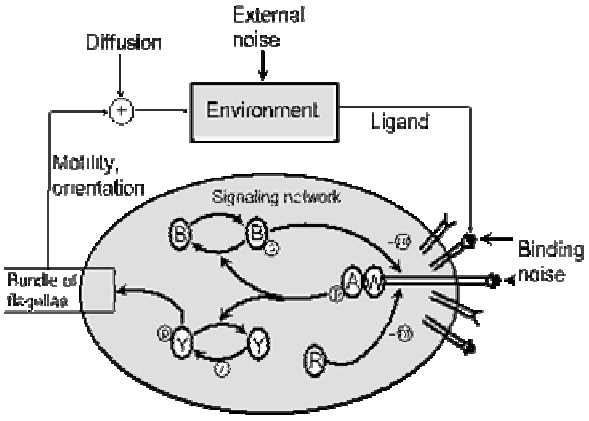

Figure 4. Signal flow diagram of the chemosensory system of *Escherichia coli.* Redrawn from Andrews et al. (2006) © Authors 2006.

etc. and determines the transcription efficiency. The product of transcription - mRNA - is an input to the signal transformer of the translation stage, where the translation efficiency is determined for the synthesis of the final protein.

The chemosensory system of *E. coli* (Figure 4) demonstrates the application of the signal-oriented approach to a more complex problem. Contrary to Fickian diffusion, *E. coli* move up a chemical gradient. A chemotactic path comprises alternate straight-line movements ("runs") and corrective changes of direction ("tumbles"). The movements are effected by long helical flagellae attached to rotary motors embedded in the cell surface. When the motors spin counter-clockwise, they propel the cells along straight paths. Clockwise rotations generate tumbles. Chemoreceptors projecting out from the cell surface sense the stimuli and generate a network of signals that eventually control the rotary motors. Details of the chemosensory mechanism are described elsewhere (Andrews et al., 2006; Baker et al., 2006).

Kremling and coworkers preferred a different application that perhaps illustrates better both the strengths and the weaknesses of their methodology. They analyzed the diauxic growth of *E. coli* on a mixture of glucose and lactose (Kremling et al., 2001). While the signal-oriented model could express the observed growth patterns, it also allowed variations in the identification of the functional units and in the signal flow diagrams. In their earlier work (Kremling et al., 2000) they had called this flexibility but the multiplicity of competing designs also make it difficult to reach an optimal representation and a reliable interpretation of the biological processes. Similar to cybernetic models of metabolic processes, to be discussed next, the signal-flow method suffers from a surfeit of parameters, many of which have to be estimated independently, and the non-uniqueness of topologies just mentioned.

CELLULAR INTELLIGENCE APPROACH

Ramkrishna and associates proposed a different perspective of microbial metabolism and growth. Like Kremling and coworkers, they were motivated by the inability of mechanistic models to portray and predict certain features of microbial cultures. For example, mechanistic kinetics accounts for steady state variations with the dilution rate in continuous flow bioreactors by invoking an unproven maintenance term but still fails to handle the transient approach to a steady state. Another case is diauxic growth on mixture of two substrates, where the

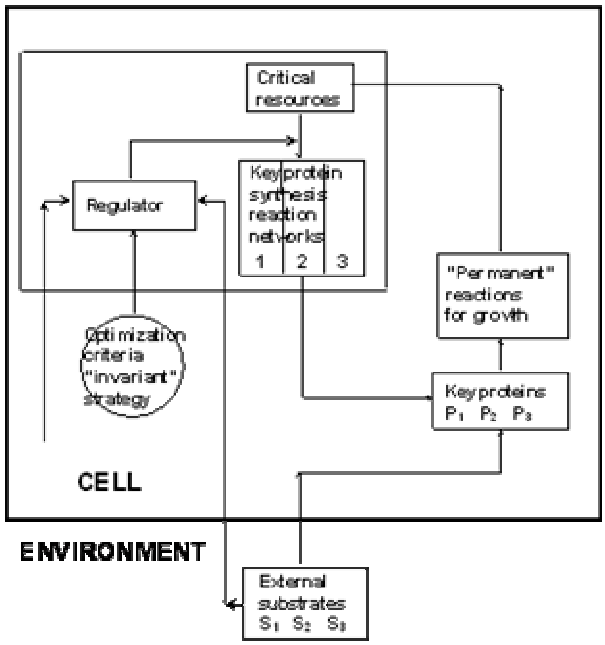

Figure 5. Information flow diagram of a typical cell, showing internal regulatory controls and the effect of the environment. Redrawn from Dhurjati et al. (1985) with permission from John Wiley and Sons Inc., New York ©1985.

mechanistic approach cannot explain why one substrate is ignored until the other is exhausted (Ramkrishna, 2003).

To account for such apparent oddities, Ramkrishna and coworkers (Dhurjati et al., 1985; Straight and Ramkrishna, 1994; Varner and Ramkrishna, 1999) proposed that living cells have internal regulatory controls that enable the cells to exercise judgment in a given set of conditions. An alternate way to describe this is to say that cells possess some rudimentary intelligence that enables them to learn from their experiences and respond to environmental changes in a manner that is most favorable to themselves.

Figure 5 represents a flow sheet of the key stages in a cybernetic modeling framework (Dhurjati et al., 1985). A typical cell contains an “adaptive machinery” that controls metabolic transformations in response to extra-cellular variations. The extra-cellular soup is viewed as a resource pool (of substrates and other nutrients), whose constituents are allocated optimally to different metabolic pathways such that a desired objective (such as cell growth) is maximized. Once the essential proteins are synthesized, a “permanent machinery” carries out the metabolic reactions for replication of cellular material. The third component is a “regulator”, and it embodies a crucial feature of cybernetic modeling that distinguishes it from mechanistic modeling. The regulator controls the distribution of resources to achieve the maximization objective referred to above. The cells choose their objectives such that their survival is favored at all times. In this sense, the cybernetic approach formalizes the evolutionary approach that Demain (1971) had recognized nearly four decades ago.

Cybernetic modeling begins with the concept of a key enzyme whose synthesis and activity are regulated cybernetically. The utilization of each substrate (in a mixture) is regulated by a corresponding key enzyme. To explain the cybernetic process in simple terms, let n substrates S_1, S_2, ……., S_n contribute to the synthesis of an equal number of proteins P_1, P_2, ……, P_n. Let R_i be the allocation rate of S_i to P_i, and R the total allocation rate. Then $u_i = R_i/R$ is the fractional allocation S_i to P_i. Based on Mandelstam and McQuillen’s (1968) work, Dhurjati et al. (1985) considered R to be constant, thereby resulting in the constraint

$$\sum_{i=1}^{n} u_i = \sum_{i=1}^{n} R_i / R = 1 \tag{12}$$

The total rate of production of cell mass, X, is the sum of the concentrations from the individual substrates:

$$\frac{dx}{dt} = -\sum_{i=1}^{n} Y_{si} \frac{ds_i}{dt} \tag{13}$$

where Y_{si} is the yield of cell mass per unit mass of S_i consumed. The rate of consumption of S_i depends, among other factors, on its key enzyme E_i, whose activity, e_i, varies with time. For Monod kinetics,

$$\frac{ds_i}{dt} = -\frac{\mu m_i e_i s_i x}{Y_{si}(K_{si} + s_i)} \tag{14}$$

Here μ_{mi} is the maximum specific growth rate on S_i and K_{si} is a saturation constant. Equation (14) differs from a classic Monod equation by including e_i, whose rate of change is simply the difference between its synthesis and degradation rates:

$$\frac{de_i}{dt} = r_{E_i} - (\beta_i + r_x)e_i \tag{15}$$

The first term represents synthesis and the second is for degradation.

At this point the cybernetic approach invokes its central concept. The activities of the key enzymes are regulated by a set of cybernetic variables λ_i^s such that they are proportional to the returns from the respective enzymes. If r_{ij} is the rate of formation of the i-th product from the j-th resource (or substrate) then:

$$\lambda_{ij}^s = \frac{r_{ij}}{\max_k (r_{ik})} \tag{16}$$

Equation (16) applies to "substitutable" substrates, that is, where any one of a set of substrates may contribute to a synthesis pathway for a product. For "complementary" substrates, where each substrate has a choice of pathways,

$$\lambda_{ij}^{c} = \frac{r_{ij} / P_{ij}}{\max_{k}(r_{kj} / P_{kj})} \quad (17)$$

Expounding on these fundamental ideas, many workers have expanded the cybernetic approach and applied it to different systems. Their studies, like Kremling et al. (2000, 2001) examples of signal-oriented modeling, expose the value as well as some weaknesses of cybernetic descriptions.

By incorporating regulatory controls that enable the cells to utilize information gained from experience and thereby respond intelligently to external conditions, cybernetic modeling is able to overcome the rigidity and the limitations of mechanistic modeling. It has successfully portrayed lag phase behavior, cellular responses to changes in dilution rate, and both diauxic and triauxic growth, features which have been difficult to describe by mechanistic methods (Bapat et al., 2006; Namjoshi and Ramkrishna, 2001; Ramkrishna, 2003). However, as mentioned above, the cybernetic approach too has weaknesses. One weakness is that quite complex models may be required to describe adequately metabolic dynamics of multi-cellular systems, especially under non-ideal conditions. A second difficulty is the inability sometimes to identify a unique cybernetic goal, thus creating uncertainty about the cellular response itself. Recent reviews (Patnaik, 2000, 2001a, 2008) have discussed these aspects in detail and suggested combining cellular intelligence with other methods.

ARTIFICIAL INTELLIGENCE APPROACH

The successes of artificial intelligence (AI) methods in different disciplines and particularly in remote sensing and control, together with the difficulties of obtaining rapid on-line acquisition of intra-cellular data perhaps motivated the use of AI for microbial processes. Many recent applications provide a testimony to the value of AI in cellular systems.

AI was initially employed in microbial cultures for broadly two purposes (Schugerl, 2001). One is for estimations of time-dependent variables that are difficult or/and expensive to monitor by instrumental methods. The second class of applications was for bioreactor control. The latter use of course required on-line data, provided either by AI methods or by sensory hardware, but it depended also on good models of biological processes. However, it is often difficult to formulate mathematical models that are sufficiently simple, accurate and flexible to be useful under realistic conditions. This difficulty generated a third class of applications of AI, for bioprocess modeling and optimization, and it has also been a driving force for cybernetic models.

The early applications of AI have been reviewed by Patnaik (1998) and by Lubbert and Simutis (1998), whereas more recent work has been discussed by Komives and Parker (2003). These applications have employed different AI methods, notably artificial neural networks, fuzzy logic and genetic algorithms. Often two or more techniques have been used in conjunction, sometimes combined also with classical mathematical models for certain features.

Neural networks seem to be the most favored method to represent microbial processes. They have been used to portray both cell growth and related dynamics (Acuna et al., 1998; Valdez-Castro et al., 2003) of microbial behavior in bioreactors affected by incomplete mixing of the broth and the inflow noise from the environment (Patnaik, 2002), and for early detection of different types of process faults (Vora et al., 1997). However, neural networks, being essentially "black box" devices, suffer from weak physiological links with the biological process, thereby creating difficulties under nonideal conditions (Chen and Rollins, 2000). Other AI methods such as fuzzy logic and genetic algorithms avoid some of these problems but have others of their own.

For instance, the choice of the membership function in fuzzy logic or the fitness function in genetic algorithms is not always known uniquely, and competing candidates may perform equally well within the experimental errors. Nevertheless, both methods have been successful in specific situations. Arnold et al. (2002) study of the adaptation of microorganisms to an inhibiting factor in an industrial brewing process provides a good practical example of the usefulness of fuzzy logic in formalizing the intuitive knowledge of skilled vinegar brewers. Hodgson and coworkers (2005) used genetic programming to reach the interesting conclusion that, for *Saccharopolyspora erythrea* cultures, constrained mathematical forms were superior to flexible unconstrained models, even though no prior knowledge of the fermentation was used.

The strengths and the weaknesses of individual AI methods suggest the possibility of combining them such that the composite model minimizes the overall weakness and/or capitalizes on the strengths. Diverse applications illustrate the validity of this approach for different microbial systems. In one of the early studies, Ye et al. (1994) coupled fuzzy logic with a feed-forward neural network to control β-galactosidase production by recombinant *E. coli*. More complex devices were employed by Coleman et al. (2003) and Fellner et al. (2003). The former maximized the production of green fluorescent protein by *E. coli* through a combination of decision-free analysis, a neural network and a hybrid genetic algorithm. In a novel hybrid network, the latter authors introduced a fuzzy node, a differential equation node and chemometric node into a back propagation network to obtain on-line estimates of diacetyl alcohol in a brewery fermenter.

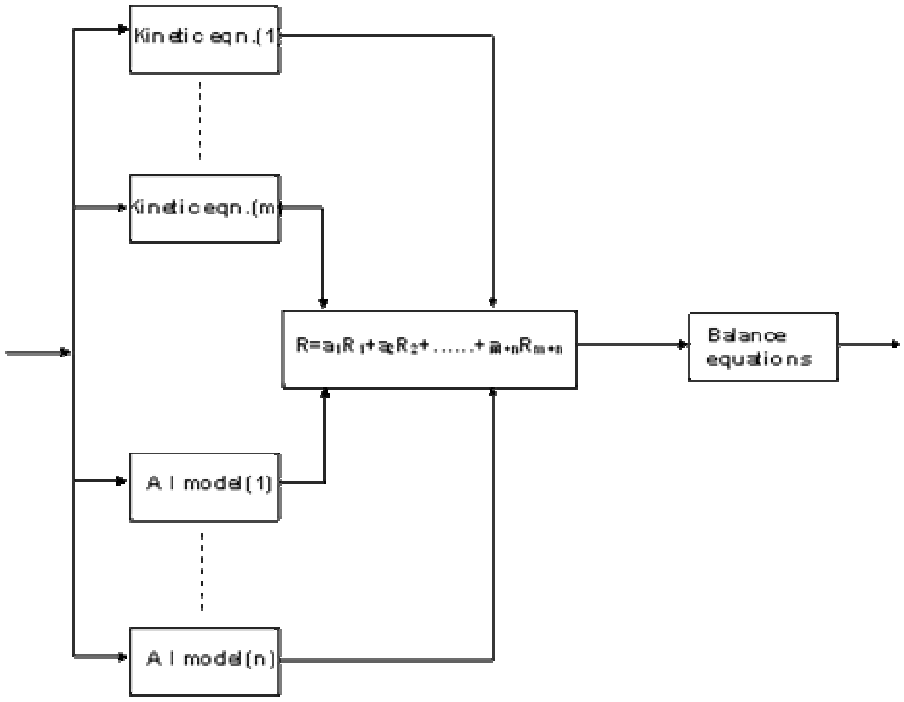

Figure 6. Block diagram of the development of a hybrid model for a microbial reactor. Mechanistic and AI models contribute in a weighted manner to the overall kinetics. The balance equations (for the bioreactor) may be mass balances or AI representations.

All the investigations cited so far have used one or more AI methods but no mechanistic model. While avoiding the weaknesses of mechanistic modeling, they have also lost its physiological relevance. Recent work by Galvanauskas et al. (2004) and by Patnaik (2003a, 2006b) has highlighted the benefits of integrating some mechanistic information with AI methods. Patnaik (2003a, 2006b) has also shown how neural networks may be designed to filter the inflow noise into a bioreactor, an important function for industrial applications.

The basic structure of a hybrid model is portrayed in Figure 6. A set of mechanistic models (e.g. Monod kinetics or substrate inhibition equations) and one or more AI models contribute to the complete kinetic description. Their outputs are fed to a bioreactor model, which may be a set of macroscopic equations or purely AI descriptors or a combination. Figure 6 incorporates Galvanauskas et al. (2004) recommendation to use a weighted combination of the kinetic components but in a more generalized manner. α_j here is the weight assigned to the j-th kinetic model; obviously $\sum_j \alpha_j = 1$ Their values may be determined iteratively.

These composite (or hybrid) neural models still do not account for intra-cellular noise. However, as discussed earlier, noise inside the cells has a vital impact on the metabolic processes (Kaern et al., 2005; Kitano, 2004a; Raser and O'Shea, 2005; Stelling et al., 2004). Moreover, since substrates supplied from outside participate in metabolic reactions, external noise enters the cells and interacts with internal noise. Although the nature of these interactions are not yet clear, we do have the interesting information that neither source of noise *per se* is entirely detrimental and optimal filtering of either, and preferably both, can indeed enhance cellular functions (Andrews et al., 2006; Patnaik, 2006b; Rao et al., 2002). These observations and the benefits of combining AI methods with equation-oriented models presents the possibility of designing composite architectures that optimally blend cellular intelligence, artificial intelligence and mechanistic models in a framework that links intra-cellular and extra-cellular processes. This concept is discussed below.

CONCEPTUAL DEVELOPMENT OF A COMPREHENSIVE MODEL

Kaern et al. (2005) have provided an elegant exposition of the different sources of noise in a microbial culture and their inter-relationship. Their concept is captured diagrammatically in Figure 1, where the influx of external noise (from the environment) has been added. Environmental noise enters through feed streams, permeates the culture broth and penetrates the cells through the diffusional transfer of substrates. Within the cells, external noise encounters intra-cellular noise. Of the two types of intra-cellular noise, extrinsic noise contributes more substan-

tially to stochasticity in gene expression than intrinsic noise (Elowitz et al., 2002; Kaern et al., 2005; Raser and O'Shea, 2005; Stelling et al., 2004)]. Whereas intrinsic noise causes differences between reporter genes in a single cell, extrinsic noise creates differences between cells. The latter thus has a direct effect on the behavior of a population of cells in a bioreactor and is therefore significant for bioreactor dynamics.

Kaern et al. (2005) and other analysts of cellular noise (Elowitz et al., 2002; Raser and O'Shea, 2005; Rao et al., 2002; Thattai and van Oudenaarden, 2004) concentrated on fluctuations in cellular components and did not consider the impact of environmental noise on these processes. On the other hand, Patnaik (2002, 2003a, 2006b) and others (Coleman et al., 2003; Galvanauskas et al., 2004; Gadkar et al., 2005; James et al., 2002) studying bioreactor problems focused on observable macroscopic variations, either without intra-cellular detail or by lumping molecular-level fluctuations into simple mathematical descriptions. Both approaches have value in their respective spheres but neither is complete, so here we will try to evolve a way to concatenate them to develop a comprehensive description of microbial processes.

The development of even a conceptual strategy needs to recognize the central role of yet another source of fluctuations that interfaces those at the cellular level with macroscopic fluctuations induced by external variations. This is the *binding noise* discussed by Andrews et al. (2006). Although their work pertains to chemotaxis, the idea and their model should be applicable to any cellular system. The mechanism of chemotaxis involves the binding of chemical ligands to receptor clusters protruding from the surfaces of cells. Since small molecules in low concentrations are involved, stochastic fluctuations are associated with this process (Kaern et al., 2005; Raser and O'Shea, 2005). Andrews et al. (2006)] argued that bacterial cells possess an inherent mechanism to filter this noise optimally. To model this mechanism, they relied on Yi et al.'s (2000) observation that the presence of an integral feedback system (Figure 7a) imparts robust adaptation to the cells. Such a mechanism may be modeled by a differentiator in series with a low-pass filter (Figure 7b). In a more general context of any cellular reaction system, the ligand-receptor binding may be replaced by the binding of substrate molecules to active sites on the cell surface, thus retaining the validity of Andrews et al.'s (2006) depiction.

Feedback circuits are the most common device to regulate noise at the genetic level. Negative feedback attenuates fluctuations whereas positive feedback amplifies them. While many examples of feedback regulation in biological systems are known and many of their mechanisms have been identified (Kaern et al., 2005; Raser and O'Shea, 2005; Rao et al., 2002; Thattai and van Oudenaarden, 2004), the construction of gene circuits that that impart the desired feedback features is still at an early stage. However, Becskei et al. (2001) designs of negative

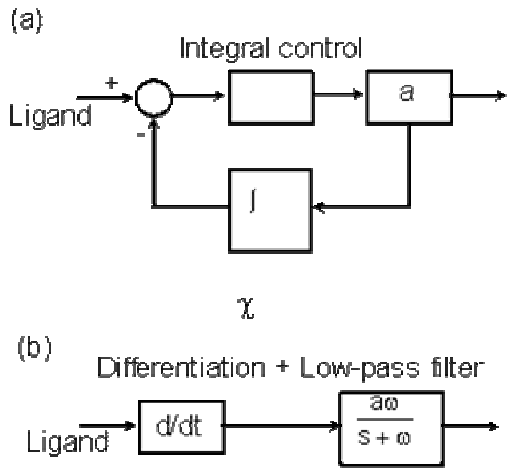

Figure 7. Regulatory system for filtering of binding noise. (a) Schematic representation of the filtering process. (b) Equivalent analog model. Redrawn from Andrews et al. (2006) ©Authors 2006.

negative (Becsei and Serrano, 2000) and positive (Becsei et al., 2001) feed-back modules in *E. coli* to control the fluctuations of a green fluorescence protein used as a marker of gene expression indicate the feasibility of synthetic gene circuits. Interestingly, simple negative feedback corresponds to a low-pass filter, which also forms part of an integrated feedback model (Andrews et al., 2006). This similarity between the two main modes of cellular feedback stabilization makes it convenient to use similar noise filtering methods.

The macroscopic broth in which the cells are immersed is subject to noise from the environment as well as dispersion in the broth itself. Although environmental noise, carried mainly by inlet streams, may be reduced by classical algorithmic filters such as the extended Kalman filter, the low-pass Butterworth filter and the cusum filter, the static nature of these devices restricts their adaptability to varying disturbances, and thus undermines their effectiveness. Neural networks as filtering devices perform much better (Gadkar et al., 2005; Patnaik, 2001b, 2002). However, these networks may be difficult to train, have limited extrapolation capability and have little organic connection with the metabolic processes. These limitations have led to the development of hybrid filters that combine neural networks for some variables with algorithmic filters for others (Galvanauskas et al., 2004; Hodgson et al., 2004; James et al., 2002; Patnaik, 2006b).

The development of hybrid filters seems to have been motivated by the success of similar modules for bioreactors *per se*. While good mixing can be achieved in small laboratory-scale bioreactors, this is difficult in large reactors. The presence of spatial gradients (Larsson et al., 1996; Liden, 2001) and the limitations as well as the

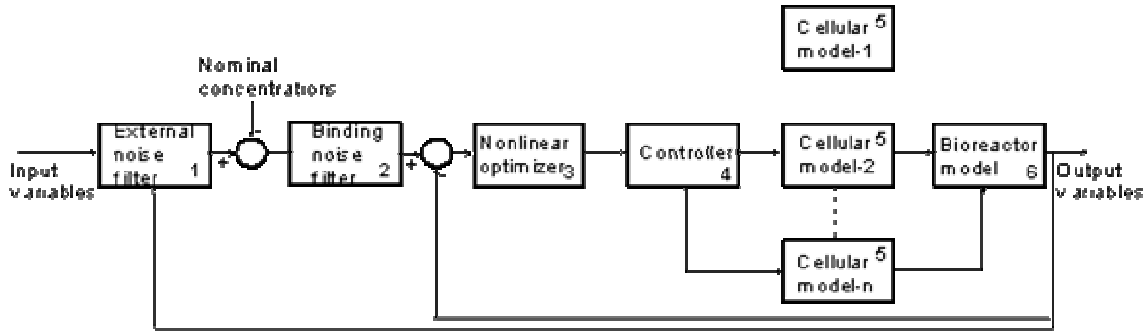

Figure 8. Flow sheet of a conceptual composite model for a microbial system. The model includes both intra-cellular and extra-cellular processes. Previous studies suggest the following representations for the components: Box 1 = auto-associative neural network, Box 2 = Differentiator + Low-pass filter, Box 3 = Optimization algorithm or AI system, Box 4 = Feed-forward neural network, Box 5 = Flexible combination of mechanistic, cybernetic and AI models, and Box 6 = Macroscopic balances + Elman neural network.

costs of instrumental methods make it impractical to have on-line measurement of all important variables (Mandenius, 2004; Sonnleiter, 2000). Off-line measurements can be too slow for rapid data feedback and control, especially in response to disturbances. Moreover, the time-varying nature of external noise and of dispersion in the broth often invalidate conventional kinetic equations developed on the basis of laboratory-scale observations. As a result control strategies that require a good model of a bio-process have limited validity in nonideal situations. Hybrid models overcome these weaknesses by enabling rapid on-line estimations of variables that are difficult to measure and by implementing “intelligent” control policies.

Most hybrid models of microbial processes (Coleman et al., 2003; Galvanauskas et al., 2004; James et al., 2002; Lubbert and Jorgensen, 2001) have used combinations of one or more AI methods with mathematical equations. However, both AI and equation-oriented descriptions ignore internal regulatory controls that cybernetic models recognize. Therefore Patnaik (2006c) recently proposed a conceptual approach that models bioreactors through arrays of neural networks, cybernetic models and AI models. He did not, however, include either binding noise or genetic noise. Since these are not isolated from each other or from extra-cellular noise and dispersion, a more holistic model should embrace all of these. Figure 8 presents a flow sheet for such a model.

Inflow streams are first filtered to prune environmental noise present in them (box 1). This filter generates the same output variables as it receives but with reduced noise. An auto-associative neural network is germane to this requirement and many applications (Patnaik, 2001b, 2003a, 2006b) have shown that it is superior to algorithmic filters and other neural configurations. On entering the cytoplasm, the substrate molecules bind to active sites on the cell surfaces; box 2 in Figure 8 contains the binding noise filter, which may be represented by a differentiator coupled to a low-pass filter (Andrews et al., 2006; Rao et al., 2002). The cellular reactions, leading to biomass growth and the formation of products, begin after the binding process. This is a critical phase, both biologically and for model building. Kinetic equations derived from observations of ideal laboratory-scale fermentations often cannot be translated directly to large non-ideal bioreactors (Liden, 2001; Lubbert and Jorgensen, 2001). AI and cellular intelligence (cybernetic) models provide more accurate, flexible and faithful descriptions. Since each method has strengths and weaknesses, a judicious combination of more than one approach is often recommended (Arnold et al., 2002; Coleman et al., 2003; Galvanauskas et al., 2004; Hodgson et al., 2004; James et al., 2002; Patnaik, 2003a; Ramkrishna, 2003). The sequence of blocks labeled (5) illustrates this idea. For generality, the microbial process is considered to have an arbitrary number of ‘n’ variables, each of whose rates of change is described by an appropriate cellular model.

The bioreactor itself may be represented by either macroscopic mass balances or by neural networks or by a combination of the two. If neural networks are used, a recurrent network of the Elman (1990) type turns out to be the best. The reason is that an Elman network has internal feedback loops that mimic the internal recirculation streamlines in a reactor with finite dispersion (Patnaik, 2003a, 2006c). The entire process is under neural control (box 4) because this is more efficient than adaptive PID control (Gadkar et al., 2005; Hisbullah et al., 2002; Patnaik, 2003a). Box (3) is a critical component in that it compares input and output data and thereby adjusts the settings of the controller dynamically. For a PID controller this involves manipulating the gain and the integral and differential time constants, whereas a neural controller requires adjustments of the weights associated with the inter-neuron signal flows. Although an AI routine may be employed for the optimizer, algorithmic multivariable optimization methods may also be acceptable if the variables of interest do not have widely different dynamics.

CONCLUDING REMARKS

Owing to the complexity of the processes involved, quantitative descriptions of cellular systems functioning in realistic situations have focused on either microscopic intracellular phenomena or a macroscopic observable behavior. Either approach generates workable models that are useful for their intended limited purposes but not beyond. Macroscopic models account for dispersion in the culture broth, transport processes and the inflow of noise form the environment, but they tend to ignore or simplify metabolic detail, intra-cellular controls and noise within the cells. Models focused on the cells *per se* describe the latter features in detail while lumping or ignoring their macroscopic manifestations.

Given that cellular processes differ widely, and even a given process behaves differently under different conditions, it is worthwhile to develop comprehensive descriptions that incorporate both intra- and extra-cellular processses under realistic conditions. The resulting model(s) may then be tailored for specific applications. The versatility and usefulness of composite models are suggested by examples of the use of two or more descriptive methodologies to simulate and optimize microbial processes. These approaches are broadly of three types – mechanistic (or equation-oriented), cellular intelligence (or cybernetic) and artificial intelligence.

Based on the topologies of the hybrid models that have been used for microbial reactors, a conceptual framework for a comprehensive composite model is devised. The flow sheet for such a model accommodates (a) fluid dispersion in the broth, (b) environmental noise, (c) genetic noise and (d) ligand or substrate binding noise in a flexible manner. Each phenomenon may described by a suitable modeling approach and, according to each application, one or more of them may be simplified or dispensed with or assigned a suitable weightage. This flexibility also allows the relative contributions of different processes to the overall behavior of a microbial reactor to be adjusttable on-line, a feature that is useful when flux distributions or product patterns or morphology or other relevant characteristics of the cells change as a fermentation progresses.

REFERENCES

Acuna G, Latrille E, Beal C, Corrien G (1998). Static and dynamic neural network models for estimating biomass concentration during thermophilic lactic acid bacteria batch cultures. J. Ferment. Bioeng. 85: 615-622.

Andrews BW, Yi T-M, Iglesias P (2006). Optimal noise filtering in the chemotactic response of Escherichia coli. PloS Comput. Biol. 2: 1407-1418.

Arnold S, Becker T, Delgado A, Emde F, Enenkel A (2002). Optimizing high strength acetic acid bioprocess by cognitive methods in an un- steady state cultivation. J. Biotechnol. 97: 133-145.

Bailey J (1998). Mathematical modeling and analysis is biochemical engineering: past accomplishment and future opportunities. Biotechnol. Prog. 14: 8-20.

Baker MD, Wolanin PM, Stock JB (2006). Systems biology of bacterial chemotaxis. Curr. Opin. Microbiol. 9: 187-192.

Balaban NQ, Merrin J, Chait R, Kowalik L, Leibler S (2004). Bacterial persistence as a phenotypic switch. Science 305: 1622-1625.

Bapat PM, Sohoni SV, Moses TA, Wangikar PP (2006). A cybernetic model to predict the effect of freely available nitrogen substrate on rifamycin B production in complex media. Appl. Microbiol. Biotechnol. 72: 662-670.

Becsei A, Serrano L (2000). Engineering stability in gene networks by autoregulation. Nature 405: 590-593.

Becskei A, Seraphin B, Serrano L (2001). Positive feedback in eukaryotic gene networks: cell differentiation by graded to binary response conversion. EMBO J. 20: 2528-2535.

Carson E, Feng DD, Pons ML, Socini-Sessa R, van Straten G (2006). Dealing with biological and ecological complexity: Challenges and opportunities. Ann. Revs. Control. 30: 91-101.

Carson JM, Doyle J (2002). Complexity and robustness. Proc. Natl. Acad. Sci. USA 99 Suppl. 1: 2538-2545.

Chen VCP, Rollins DK (2000). Issues regarding artificial neural network modeling for reactors and fermenters. Bioprocess Eng. 22: 85-93.

Coleman MC, Buck KK, Block DE (2003). An integrated approach to optimization of Escherichia coli fermentations using historical data. Biotechnol. Bioeng. 84: 274-285.

Demain AL (1971). Overproduction of microbial metabolites and enzymes due to alteration of regulation. Adv. Biochem. Eng./Biotechnol. 1: 113-142.

Dhurjati P, Ramkrishna D, Flickinger C, Tsao GT (1985). A cybernetic view of microbial growth: modeling cells as optimal strategists. Biotechnol. Bioeng. 27: 1-9.

Dun WB, Ellis DI (2005). Metabolomics: current analytic platforms and methodologies. Trends Analyt. Chem. 24: 285-294.

Elman J (1990). Finding structure in time. Cognitive Sci. 14: 1789-1811.

Elowitz M, Levine A, Siggle E, Swain P (2002). Stochastic gene expression in a single cell. Science. 297: 1183-1186.

Fellner M, Delgado A, Becker T (2003). Functional nodes in dynamic neural networks for bioprocess modeling. Bioprocess Biosyst. Eng. 25: 263-270.

Gadkar KG, Mehra S, Gomes J (2005). On-line adaptation of neural networks for bioprocess control. Comput. Chem. Eng. 29: 1047-1057.

Galvanauskas V, Simutis R, Lubbert A (2004). Hybrid process models for process optimization, monitoring and control. Bioprocess Biosyst. Eng. 26: 393-400.

Garhyan P, Elnashaie SSEH (2004). Static/dynamic bifureation and chaotic behavior of an ethanol fermenter. Indl. Eng. Chem. Res. 43: 1260-1273.

Garhyan P, Elnashaie SSEH, Haddad SA, Ibrahim G, Elshishini SS (2003). Exploration and exploitation of bifurcation/chaotic behavior of a continuous fermenter for the production of ethanol. Chem. Eng. Sci. 58: 1479-1496.

Gombert AK, Nielsen J (2000). Mathematical modeling of metabolism. Curr. Opin. Biotechnol. 11: 180-186.

Haag JE, Wouwer AV, Bogaerts P (2005). Dynamic modeling of complex biological systems: a link between metabolic and macroscopic description. Math. Biosci. 193: 25-49.

Hisbullah M, Hussain MA, Ramachandran KB (2002). Comparative evaluation of various control schemes for fed-batch fermentation. Bioprocess Biosyst. Eng. 24: 309-318.

Hodgson BJ, Taylor CN, Ushio M, Leigh JR, Kalganova T, Baganz F (2004). Intelligent modeling of bioprocesses: a comparison of structured and unstructured approaches. Bioprocess Biosyst. Eng. 26: 353-359.

James S, Legge R, Budman H (2002). Comparative study of black-box and hybrid estimation methods in fed-batch fermentation. J. Process Contr. 12: 113-121.

Kaern M, Elston TC, Blake WJ, Collins JJ (2005). Stochasticity in gene expression: from theories to phenotypes. Nat. Revs. Genet. 6: 451-464.

Kitano H (2004a). Biological robustness. Nat. Revs. Genet. 5: 826-837.

Kitano H (2004b). Cancer as a robust system: implications for anticancer therapy. Nat. Revs. Cancer 4: 227-235.

Komives C, Parker RS (2003). Bioreactor state estimation and control. Curr. Opin. Biotechnol. 14: 468-474.

Kremling A, Bettenbrock K, Laube B, Jahreis K, Lengeler JW, Gilles ED

(2001). The organization of metabolic reaction networks. III Application for diauxic growth on glucose and lactose. Metabol. Eng. 3: 362-379.
Kremling A, Jahreis K, Lengeler JW, Gilles ED (2000). The organization of metabolic reaction networks: A signal-oriented approach. Metabol. Eng. 2: 190-200.
Larsson G, Tornquist M, Wernersson ES, Tragardh C, Noorman H, Enfors SO (1996). Substrate gradients in bioreactors: origins and consequences. Bioprocess Eng. 14: 281-289.
Lengeler JW, Drews G, Schlegel HG (1999). Biology of the Prokaryotes. Oxford: Thieme Verlag, Stuttgardt/Blackwell Science.
Liden G (2001). Understanding the bioreactor. Bioprocess Biosyst. Eng. 24: 273-279.
Lubbert A, Jorgensen S (2001). Bioreactor performance: a more scientific approach for practice. J. Biotechnol. 85: 187-212.
Lubbert A, Simutis R (1998). Advances in modeling for bioprocess supervision and control. In: Subramanian G (Ed) Bioseparation and Bioprocessing. Weinheim: Wiley-VCH, Vol. I, Ch.15.
Mandelstam J, McQuillen K (1968). Biochemistry of Bacterial Growth. Oxford: Blackwell.
Mandenius CF (2004). Recent developments in the monitoring, modeling and control of biological production systems. Bioprocess Eng. 26: 347-351.
Namjoshi A, Ramkrishna D (2001). Multiplicity and stability of steady states in continuous bioreactors. Dissection of cybernetic models. Chem. Eng. Sci. 56: 5593-5607.
Namjoshi AA, Hu WS, Ramkrishna D (2003). Unveiling steady state multiplicity in hybridoma cultures. The cybernetic approach. Biotechnol. Bioeng. 81: 80-91.
Narang A, Konopka A, Ramkrishna D (1997). New patterns of mixed substrate utilization during batch growth of Escherichia coli. Biotechnol. Bioeng. 55: 747-757.
Ortoleva P, Berry E, Brun Y, Fan J, Fontus M, Hubbard K, Jaquaman K, Jarymowycz L, Navid A, Sayyed-Ahmad A, Shrief Z, Stanley F, Tuncay K, WeiTzke E, Wu LC (2003). The Karyote physico-chemical genomic, proteomic, metabolic cell modeling system. OMICS J. Integrat. Biol. 7: 269-283.
Patnaik PR (1998). Neural network applications to fermentation processes. In: Subramanian G. (Ed.) Bioseparation and Bioprocessing. Weinheim: Wiley-VCH, I, Ch. 14.
Patnaik PR (2000). Are microbes intelligent beings? An assessment of cybernetic modeling. Biotechnol. Adv. 18: 267-288.
Patnaik PR (2001a). Microbial metabolism as an evolutionary response: The cybernetic approach to modeling. Crit. Revs. Biotechnol. 21: 155-175.
Patnaik PR (2001b). A simulation study of dynamic neural filtering and control of a fed-batch bioreactor under nonideal conditions. Chem. Eng. J. 84: 533-541.
Patnaik PR (2002). Neural optimization of fed-batch streptokinase fermentation in a nonideal bioreactor. Can. J. Chem. Eng. 80: 920-926.
Patnaik PR (2003a). An integrated hybrid neural system for noise filtering, simulation and control of a fed-batch recombinant fermentation. Biochem. Eng. J. 15: 165-175.
Patnaik PR (2003b). Effect of fluid dispersion on cybernetic control of microbial growth on substitutable substrates. Bioprocess Biosyst. Eng. 25: 315-321.
Patnaik PR (2005). Application of the Lyapunov exponent to detect noise-induced chaos in oscillating microbial cultures. Chaos Solitons Fractals 26: 759-765.
Patnaik PR (2006a). Fed-batch optimization of PHB synthesis through mechanistic, cybernetic and neural approaches. Bioautomation 5: 23-38.
Patnaik PR (2006b). Hybrid filtering to rescue stable oscillations from noise-induced chaos in continuous cultures of budding yeast. FEMS Yeast Res. 6: 129-138.
Patnaik PR (2006c). Synthesizing cellular intelligence and artificial intelligence for bioprocesses. Biotechnol. Adv. 24: 129-133.
Patnaik PR (2008). Intelligent models of the quantitative behavior of microbial systems. Food Bioprocess Technol. (in press).
Ramkrishna D (2003). On modeling of bioreactors for control. J. Process. Contr. 13: 581-589.
Rao CV, Wolf DM, Arkin AP (2002). Control, exploitation and tolerance of intracellular noise. Nature 420: 231-237.
Raser JM, O'Shea EK (2005). Noise in gene expression: origins, consequences, and control. Science 309: 2010-2013.
Richman DD (2001). HIV chemotherapy. Nature 410: 995-1001.
Schugerl K (2001). Progress in monitoring, modeling and control of bioprocesses during the last 20 years. J. Biotechnol. 85: 149-173.
Shimizu H (2002). Metabolic engineering – Integrating methodologies of molecular breeding and bioprocess systems engineering. J. Biosci. Bioeng. 94: 563-573.
Sonnleiter B (2000). Instrumentation of biotechnological processes. Advances in Biochemical Engineering/Biotechnology 66:1-64.
Stelling J, Sauer U, Szallasi Z, Doyle FJ III, Doyle J (2004). Robustness of cellular functions. Cell 118: 675-685.
Straight JV, Ramkrishna D (1994). Cybernetic modeling and regulation of metabolic pathways: growth on complementary nutrients. Biotechnol. Prog. 10: 574-587.
Swain PS, Elowitz MB, Siggia ED (2002). Intrinsic and extrinsic contributions to stochasticity in gene expression. Proc. Natl. Acad. Sci. USA 99: 12795-12800.
Thattai M, van Oudenaarden A (2004). Stochastic gene expression in fluctuating environments. Genetics 167: 523-530.
Valdez-Castro L, Baruch I, Barrera-Cortes J (2003). Neural networks applied to the prediction of fed-batch fermentation kinetics of Bacillus thuringiensis. Bioprocess Biosyst. Eng. 25: 229-233.
Varner J, Ramkrishna D (1998). Application of cybernetic models to metabolic engineering: Investigation of storage pathways. Biotechnol. Bioeng. 58: 282-290.
Varner J, Ramkrishna D (1999). Mathematical modeling of metabolic pathways. Curr. Opin. Biotechnol. 10: 146-150.
Vora N, Tambe SV, Kulkarni BD (1997). Counterpropagation neural networks for fault detection and diagnosis. Comput. Chem. Eng. 21: 177-185.
Wang Q, Wu C, Chen T, Chen X, Zhao X (2006). Integrating metabolomics into systems biology to exploit metabolic complexity: strategies and applications in microorganisms. Appl. Microbiol. Biotechnol. 70: 151-161.
Ye K, Jin S, Shimizu K (1994). Fuzzy neural network for the control of high cell density cultivation of recombinant Escherichia coli. J. Ferment. Bioeng. 77: 663-673.
Yi T-M, Huang Y, Simon MI, Doyle J (2000). Robust perfect adaptation in bacterial chemotaxis through integral feed-back control. Proc. Natl. Acad. Sci. USA 97: 4649-4653.
Zupke C, Stephanopoulos G (1995). Intracellular flux analysis in hybridomas using mass balances and in vitro ^{13}C NMR. Biotechnol. Bioeng. 45: 292-297.