academicJournals

Vol. 5(5), pp. 97-103, June 2013
DOI 10.5897/JMER12.032
ISSN 2141-2383 © 2013 Academic Journals
http://www.academicjournals.org/JMER

Journal of Mechanical Engineering Research

Full Length Research Paper

Problems in the robot path control caused by AL-7075 chassis distortion and methods of improvement through non-conventional machining process

Ehsan Amouzegar*, Ali Doniavi and Samerand Rash Ahmadi

Department of Mechanics of Manufacturing and Production, Faculty of Mechanical Engineering, National University of Urmia, Urmia, Iran.

Accepted 3 May, 2013

In the field of research and manufacturing of control surfaces in robot components using 7075-T6 aluminum alloy, distortion during/after machining occurs because of the material removal forces and residual stresses and it affects robot path control. After the exact inspections, the main factors were found to be the machining strategy parameters in milling operation. This paper first presents flatness significance of robot chassis as a control surface for accurate path control, then discusses main causes of the Al-7075-T6 distortion, and offers methods of distortion reduction in material removal process by non-conventional milling strategy and finally optimum experiment parameters have been carried out. We have concluded this paper with a review of the main findings which will set the domain of our current and future research.

Key words: Aluminum 7075 T6, distortion, control surface, robot, chassis.

INTRODUCTION

Aluminum alloy 7075-T6 categorized in the 7000 group, Zinc is the major alloying element and (T) stands for heat treated materials, primarily used for critical structures such as chassis in control surfaces with highest strength (The Materials Bible, 1999). In order to have enough toughness in control surfaces (Jin Feng, 2008) this alloy has been used for production of robot chassis.

Aluminum parts distort during/after machining. When an area of the part which is on residual stress mode, is removed this causes an imbalance of the tensile/compressive layers (Hatamleh et al., 2009), thus, the part distorts to maintain a balance of compressive and tensile stresses. If the resulting residual stresses in the part are zero or very low, no movement occurs (Mandy et al., 2007); however, to achieve such a state, almost all the machining conditions must be chosen correctly (Robinson, 2012). Distortion is problematic in several ways. It may cause permanent overshoot beyond acceptable dimensional tolerance limits; also the potential exists for producing scrap or rework, both of which add to overall manufactured cost (Mitchell, 2004). Moreover, If the surface is subsequently machined away to expose the underlying tensile stress state, these benefit compromised or reversed. Distortion cause parts fail in service in a shorter time than expected (Talemi et al., 2011), Hence mild material removal condition for this alloy preferred for distortion reduction (Mandy et al., 2007).

In the subject of decreasing distortion of Al 7075 alloy there have been several investigation carried out. For example separation of roughing and finishing machining operation into two periods of time which this period takes

*Corresponding author. E-mail: ehsan.amouzegar@gmail.com, Ehsan.Amouzegar@yahoo.com. Tel: +98 917 555 7355.

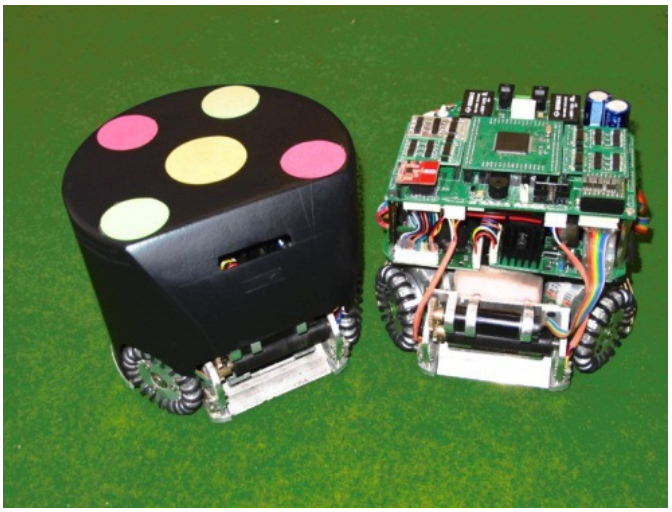

Figure 1. Small size soccer player robot.

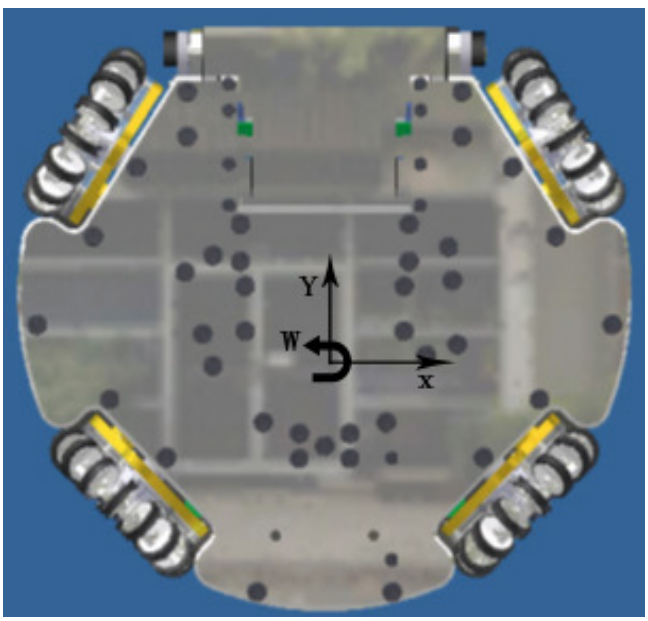

Figure 2. Bottom view of robot and degrees of freedom.

several days for letting the material distort and then finishing the machining of component into the final dimension (Mitchell, 2004), but the amount of time to rest the component and the offset value from final dimension is impossible to predict. Another heat treatment method was carried out by Mandy et al but the area of treatment for decreasing distortion is again unpredictable and mild machining process is time consuming and increases costs. In this experiment a practical non-conventional procedure would be introduced for decreasing distortion of Al 7075 alloy by special machining condition setup and new machining strategy.

Literature review

Al 7075 alloys significantly use in control surfaces like robot chassis but if the chassis distort after assembling the robot, the misalignment of assembly causes complicated problems in the control of path and there would be an unstable condition to gain a specific parameters for applying to the wheel's servo motors of robot, for example the torque of the wheels vary in all times. In this case the robot is out of path control. Just-in-time path control of robot has been carried out by MRL-2011 which required specific sensors for transferring feedback from the wheels and compensates the misalignment of robot chassis. In this experimental investigation stress relived Al 7075-T6 used for prototype manufacturing of robot chassis and inspects improvement of path control using undistorted robot chassis.

In the field of manufacturing of small size soccer player robots for Robocop competitions, the Omni-directional wheels have been used, allows robot to have three degrees of freedom in the playing field's plane (Cornell, 2000). Figure 1 shows a small size prototype soccer player robot.

The degrees of freedom are *forward translation*, *lateral translation*, and *rotation*. Figure 2 shows the degrees of freedom. Three degrees of freedom is the maximum number that is possible in a plane.

For accurate path control of the robot, it is necessary to make a worst-case assumption and the critical motion of the robot which is in the forward translation (Cornell, 2000). In this situation, weight is equally distributed to the back two wheels, and both wheels are 45º off from the direction of acceleration. Figure 3 shows schematically thrust forces in forward translation by the rear wheels.

By applying a force balance according to Newton's second law, required force is needed to be transferred from the robot's wheels to the ground for forward translation (Cornell, 2000). Thus, the Equation (1) is the required forces by rear wheels that can be expressed as:

$$\sum F = ma$$

$$2F_{f,back}\cos(45^{\circ}) = ma$$

$$F_{f,back} = \frac{\sqrt{2}}{2}ma \qquad (1)$$

Where F is the forces applied by wheels, m is the mass of the robot and a is the acceleration.

Thus, for accurate path control the applied force by the wheels must be balanced. This occasion mostly depend on the accuracy in the flatness of the chassis of the robot as a control surface and alignment of chassis assembly, hence any misalignment causes problem in path control.

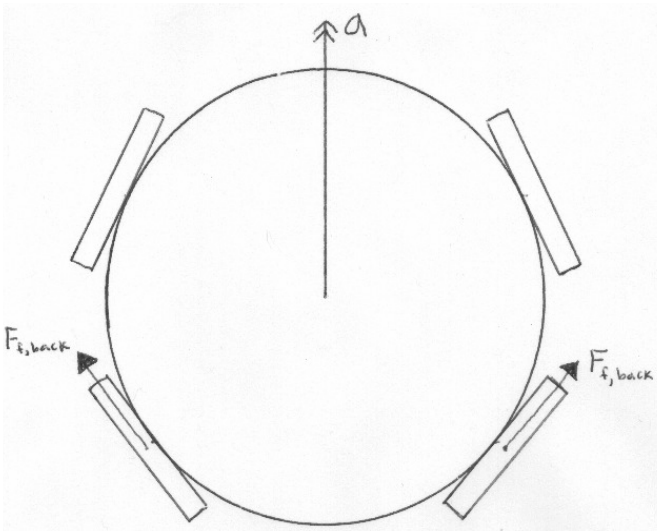

Figure 3. Layout used to determine forces for forward translation.

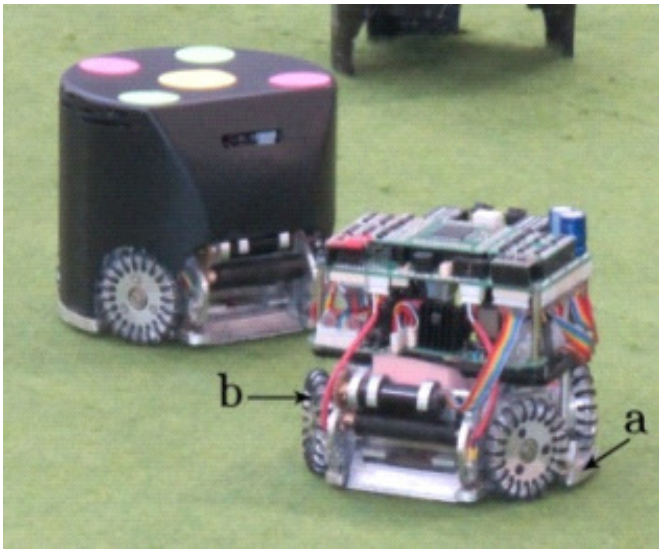

Figure 4. Small size soccer player robot: (a) robot chassis, (b) robot wheel.

With assumption of equal torque applied by wheels servo motors, study on the distortion in the chassis with Al 7075-T6 material as the main cause of flaw in path control has been investigated.

When the chassis of an autonomous robot as a control surface distorted, the wheels get a dead space from the floor (Figure 4), then different friction forces applied by robot wheels, so exact path control is not possible.

Although the robot inertia is constant for all different floor surfaces (Sukvichai et al., 2009), the friction force and traction torque are changed based on the dead space of the wheels from floor caused by the distortion of control surfaces in chassis of the robot.

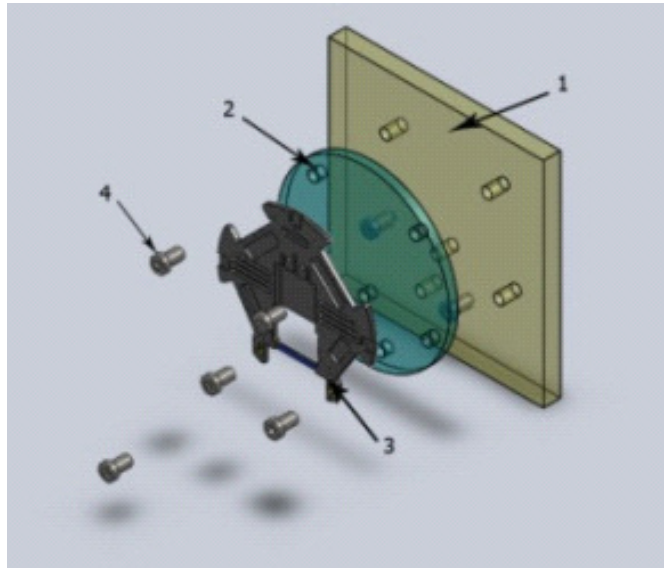

Figure 5. Number (1) Milling fixture, number (2) raw material cut by water jet and number (3) machined part.

EXPERIMENTAL PROCEDURES

When the robot chassis distorted, deviance is observable in the robot positioning in a specific coordinate and the exact control of path is impossible (Sukvichai et al., 2009), in this study investigations were conducted to obtain distortion prevention of 7075-T6 aluminum alloy components manufactured by milling operation using non-conventional machining setup and checking the effect on the path control, hence dependent parameters for controlling distortion must be recognized in the material removal process. Significance effects of following parameters in machining setup are indispensable as were introduced in pervious researches in machining of Al-7075 alloy (Mandy et al., 2007).

Raw material cutting

Cutting operation of Al-7075-T6 to the desired dimension with traditional methods, usually may apply plastic deformation to the raw material and in the thin materials bending possibly occurs and above all, may increase the distortion before/after machining (Flores et al., 2012); to modify such defects, cutting with non-traditional methods is suggested. In this experiment water jet cutting method has been chosen to cut the raw material with 10 mm offset from the final dimension, in this way applied mechanical force and the material removal volume decreased, so less force is required for machining to final dimension and the amount of exerted stresses during machining decreased, Thus the possibility of the component distortion will be decreased.

Figure 5 number (1) demonstrates the robot chassis to be machined from the number (2) raw material cut by water jet and (3) a grinded steel plate fixture for milling operation.

Balanced clamping forces

If the clamping forces of the raw material in different points of the component are unbalanced, this may results the distortion of the component during machining process or right after the unclamping the finished part, spring back phenomena may happen (Mammana

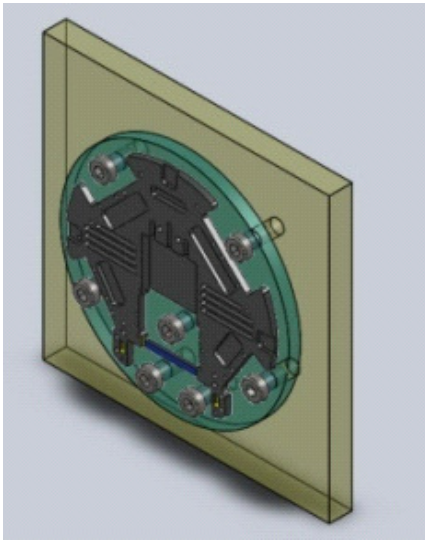

Figure 6. Demonstrates suitable clamping condition for chattering prevention.

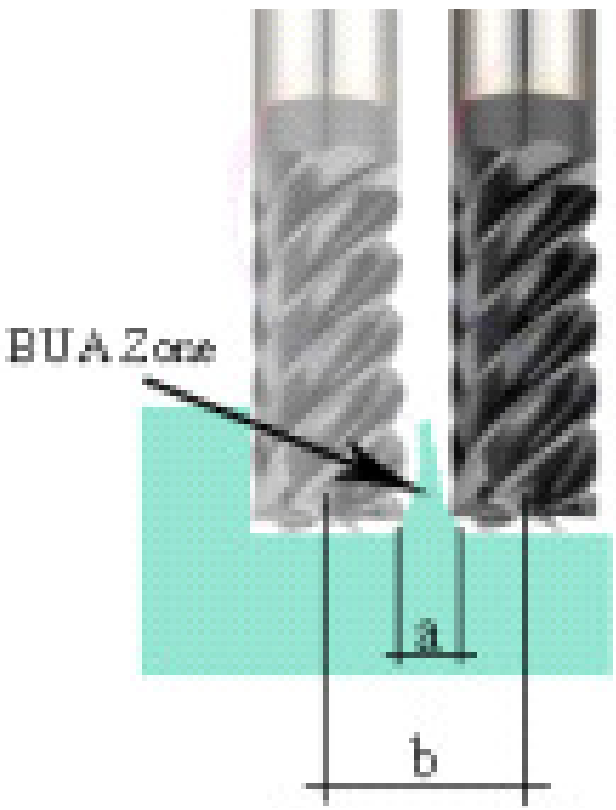

Figure 7. (a) Represents BUA width between two skims and (b) indicates tool step over value.

and Díaz, 2010) moreover, tool or work piece chattering may occur. To optimize mentioned problems, applying equal forces by torque meters can control clamping forces. Ignoring this subject in thin components causes spring back right after unclamping. Paying attention to this subject to achieve the desired flatness tolerance is critical.

In this experiment, several holes in different part of the raw material for clamping has been improvised which were cut by water jet, hence the part can completely sticks to the grinded fixture surface and vibration during machining process decreased. Figure 6 demonstrates convenient clamping condition.

Tool step over value effects

Residual stresses are normally relieved by allowing the area of the part elastically stressed to progress towards a plastic state. Stress relief occurs when the level of residual stress is greater than the yield strength of the material in its current plastic state (Mandy et al., 2007). Therefore, portions of that part actually yield (on a microscopic scale) to accommodate the excessive stress and strains exerted during material removal process. Built up Area (BUA) is the amount of material, swelling between the two sweeps of tool in milling operation. Figure 7 (a) represents BUA width between two skims and (b) indicates tool step over value.

BUA demonstrates that the component has been exposed to imbalanced cutting forces and it must not be considered that the area consists of only chips. The BUA area of the part indicates the residual stress mode and causes an imbalance of the tensile/compressive layers. Thus, the part distorts to maintain a balance of compressive and tensile stresses. The step over value is always less than the tool diameter (to prevent raster lines) so in machining of this alloy this value has been chosen lower than the radius of the tool to reduce cutting forces (Robinson et al., 2012).

Tool step down value effects

The value of the tool step down directly indicates the amount of applied forces to the workpiece, in this case of Al-7075-T6, lower depth of cut has been suggested in order to reduce machining residual stress and distortion after material removal process (Robinson et al., 2012).

Material removal feed rate

In the machining of the Al7075-T6 mild cutting condition has been suggested in order to prevent distortion of the machined component (Mandy et al., 2007). This alloy has the tendency to form the BUE chips, because zinc is one of the major element in this alloy; the depth of cut increased and the feed rate decreased, the result would be reduction in tool crater wear and premature tool breakage.

Set up procedure

In this experimental investigation, the change of the following machining strategy parameters in Powermill CNC programming software for manufacturing robot chassis component according to previous discussions has been concluded:

1. Increasing tool revolution.
2. Decreasing depth of cut in straight movements (mild conditions).
3. Increasing cutting feed rate.
4. Decreasing tool plunging and drilling feed rate.

Almost in all of the CAM software like Powermill, it is possible to adjust feed rates according to user material condition that is to be removed. Figure 8 shows the adjusted condition for Al 7075-T6: Among the mentioned parameters the value of the plunge and

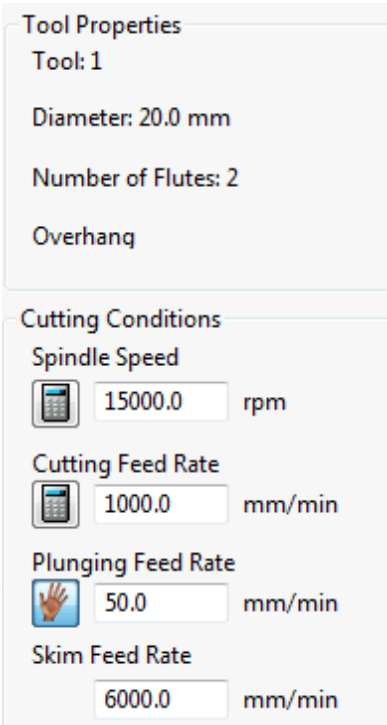

Figure 8. Shows the adjusted condition for Al 7075-T6 in Powermill software.

Table 1. Constant values for Al 7075-T6 used in the Equation (2).

Material	f0 (mm/rev)	A	B
7075-T6	0.00033	0.45	100.48

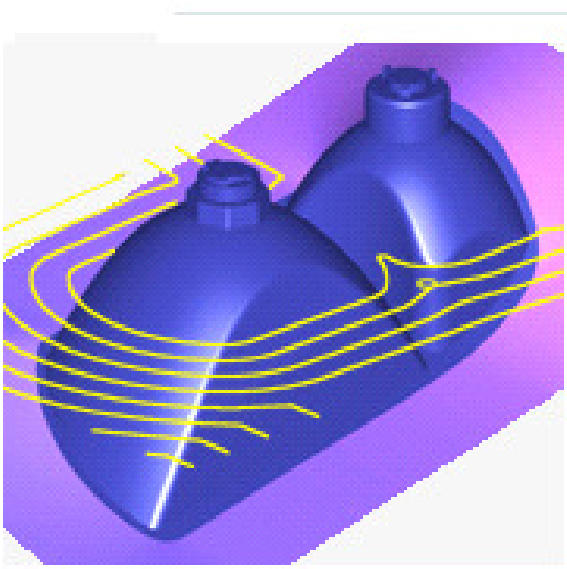

Figure 9. Offset area clear tool path pattern.

drilling feed rate is more critical for decreasing distortions; in fact, it can generate more imbalance tension/compression force around the hole and/or end mill tool plunging area, resulting in machining residual stresses.

In the conclusions of Kouam et al. (2010) experiments, it can be seen that only the 7075-T6 is sensitive to variation of the cutting speed, and illustrates an obvious decreasing in the average thrust force, which is probably due to the softening effect at relatively high plunging feed rates. This phenomena is the main reason of the machining distortion, in fact, the axial direction feed (thrust force Fz) during drilling and tool plunging determines the chip thickness, which is the major factor governing the cutting forces. Hence prediction of the chip form is critical to avoid BUE chip formation, generating chip segmentation and optimized plunging feed rate. It is possible to calculate feed rate with Equation 2 depending on the cutting parameters and the material used.

$$f = f_0 A e^{-\left(\frac{v}{B}\right)} \quad (2)$$

Where f is the feed rate, v is the cutting speed, A and B are constants depending on the work piece material used. The constants of Equation (2) are given as shown in Table 1.

Machining strategy pattern

Machining strategies pattern vary substantially depending on whether the component is being machined from thick plate or the pre-forms. Distortions may happen between the front/back and mid-depth of the box (corresponding to the surfaces of the original plate), most of them occur when the pockets are first roughed in (Mammana et al., 2012). Machining distortion can be reduced by roughing closer to final dimensions, then after a period of time called (breaking time) and/or heat treatment; it could be machined to final dimension. But choosing the amount of offset between processes is difficult and depends on the geometry and the amount of residual stresses. If the offset amount chose low, finishing operation could not modify the distortions that happened through the roughing and heat treatment, whereas higher offset amount causes after-finishing distortions and useless component production (Mandy et al., 2007).

Another way of reducing machining distortion is to incrementally remove material symmetrically from both sides of each deck and web. This helps minimize bending distortion by retaining symmetric residual stresses through the thickness. Unfortunately, incremental machining requires a large number of small machining passes, thus increases machining time and cost. In the most difficult situations, incremental approaches may enable challenging distortion problems to be overcome.

The experiments and the machining of the robot chassis has been done by a CNC milling machine, the programming has been done by using Powermill software, finally best results gained through the offset area clear strategy pattern for the roughing (Figure 11). In every depth of cut, Reorder command to contrariwise the tool path has been used (Figure 9).

EXPERIMENTAL INSTRUMENT

In this investigation, a Quaser 1020 CNC mill has been used for machining operation of robot chassis and the conditions has been as follows:

Tool holder diameter: 20 mm diameter
Cutting Tool Shape: 2 flutes APKT6
Spindle Revolution: 35000 rpm
Cutting Feed Rates: 2500 mm/min

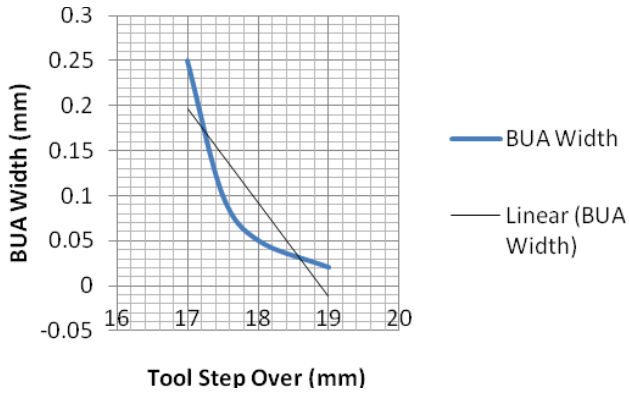

Figure 10. Indicates effect of tool step over value for decreasing BUA.

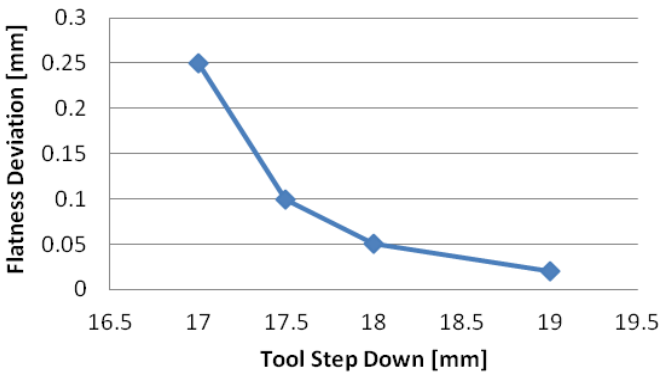

Figure 11. Shows effect of tool step down on flatness deviation.

Table 2. Flatness deviation measured in reversing tool path in each depth of cut.

Experiment number	Reversing tool path in each depth of cut (mm)	Flatness deviation (mm)
1	0	0.45
2	5	0.3
3	3	0.17
4	2	0.04
5	2	0.02

Plunging And Drilling Feed Rates: 100 mm/min.

Also a 3D Automatic **CMM** (Hencer 654CNC) has been used for dimensional measurement and checking flatness of machined part, hence the inspection of distortion reduction of robot chassis has been carried out through checking of the path control.

RESULTS AND DISCUSSION

1. Rather than Stress Relieving methods optimizing machining parameters could incredibly reduce machining distortions.
2. Cutting Al-7075-T6 raw material with non-traditional methods like water jet causes, decreasing the material removal volume, so less force required for machining to final dimension and the amount of exerted stresses during machining decreased, thus the possibility of the component distortion will be decreased.
3. Balanced clamping force decreases distortion of the component during machining process and/or right after unclamping the finished part; by applying equal forces by torque meters, clamping forces could be controlled. Ignoring this subject in thin Al-7075 components causes spring back right after unclamping and chattering of the component during operation.
4. For elimination of BUA, decreasing tool step over and flutes number value would relieve this phenomena. It can also cause overcoming the tendency of chips stick and tool breakage. Figure 10 indicates that BUA width decreases obviously by reduction of the tool step over value.
5. Lower depth of cut has been suggested in order to reduce machining residual stress and distortion during/after material removal process.

Figure 11 demonstrates the measured flatness deviation in finished part, after one week breaking time between machining and measurement. It shows distortion in flatness reduces directly with lowering tool step down value.

6. By contrariwizing the tool path in every specified depth of cut in the Table 2, using Reorder command in CNC programming, it has been observed that the component's distortion decreased incredibly as there is no stress reliving heat treatment and breaking time between roughing and finishing.

It could be concluded that, the exerted forces has been applied symmetrically to accomplish material removal process by reversing the tool pass repeatedly. These results have been observed with repeatability and reproducibility. Table 2 represents the results of flatness measurement by reversing the tool path in each valued depth of cut.

Comparison of distorted chassis and desirable flat robot chassis on path control made by Al 7075-T6

As it has been discussed that exact path control is not possible by a distorted robot chassis, Figure 12 (a) shows the exact coordinate point gained by accurate control surface (Flat chassis) and Figure12 (b) shows the values achieved by the robot with distorted chassis.

Also the forward translation of the robot has been inspected by accurate flat robot chassis and distorted chassis at different speeds. Figure 13 green lines indicates robot motions with distorted chassis and red lines shows robot motion on desired path and exact robot positioning.

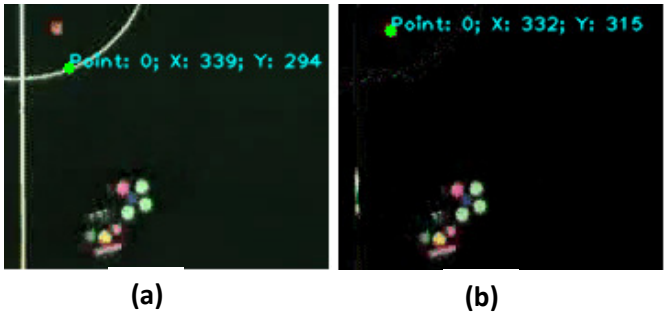

Figure 12. (a) Shows exact robot positioning (b) shows imprecise robot positioning with distorted chassis.

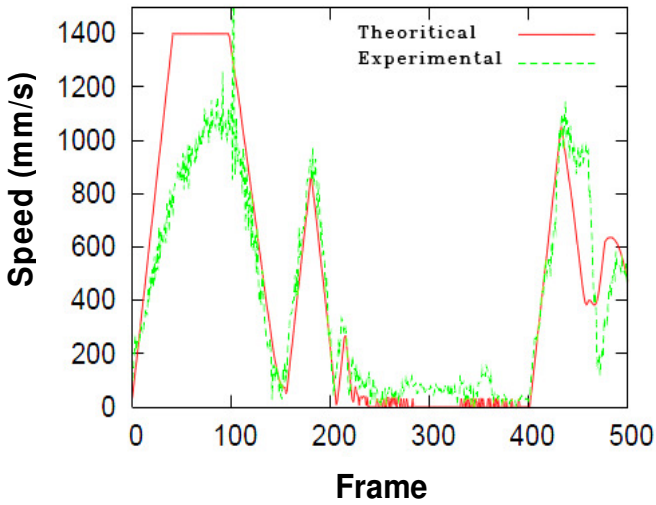

Figure 13. Green Lines: Robot path with distorted chassis Red Lines: robot path with chassis.

It obviously appeared that the main cause of robot path control difficulty is distorted robot chassis which has been overcome by elimination of machining Al-7075-T6 through elaborated machining strategy.

REFERENCES

ASM Handbook (1991). Heat Treating of Al Alloys. ASM Int. Mater. Park 4:841-879.

Choudhry MA, Ashraf M (2007). Effect of heat treatment and stress relaxation in 7075 Al alloy. J. Alloys Compd. 437:113-116.

Dale B, Obert S (2000). Quantification of Corrosion in 7075-T6 Al Alloy. Texas Tech University, US.

Dingle P, Kim J, Kunz J, Li Q, Mondello J, Palmer J, Roberts J, Yim J (2004). Evolution of active dribbling mechanisms. Mechanical group final documentation, RoboCup Documentation.

Flores RC, Guel EI, Miki YM, Martinez Sánchez R, Herrera Ramirez JM (2012). Microstructure and mechanical properties of 7075 Al alloy nanostructured composites processed by mechanical milling and indirect hot extrusion. Mater. Characterization 63:39-46.

Hatamleh O, DeWald A (2009). An investigation of the peening effects on the residual stresses in friction stir welded 2195 and 7075 Al alloy joints. J. Mater. Proc. Technol. 209(10):4822-4829.

Jin Feng PZW (2008). Corrosion behaviors and microstructures of 7075 Al alloy with various aging treatments. Trans. Nonferr. Metals Soc. China 18(4):755-762.

Joseph RD (2007). ASM Handbook, Machining 16:761-766.

Leigh E, Tlusty J, Schueller J (1999). Appling High-Speed Machining Techniques On Rotor Grip Configuration. 55th Annual Forum. American Helicopter Society, Ca.

Mammana CA, Díaz FV (2010). Study of residual stress tensors in high-speed milled specimens of Al Alloys using method of indent pairs. J. Appl. Sci. ISSN:2040-7467.

Mandy SY, Kenneth HE (2007). Overcoming residual stresses and machining distortion in the production of Al Alloy Satellite Boxes. California, US, p. 6811.

Metals Handbook (1991). Heat Treating. ASM Int. 10:867-869.

Mitchell I (2004). Residual stress reduction during quenching of wrought 7075 Al Alloy. Worcester Polytechnic Institute.

MIL H (1999). Metallic Materials and Elements for Aerospace Structures. The Materials Bible. Military Handbook.

Muster TH, Cole IS (2005). The Influence of wetting process on pit formation on 7075-T6 Alloys. Manufacturing and Infrastructure Technology. Victoria. Australia

Niu MC-Y (2000). Airframe stress analysis and sizing. Mater. Properties 03(4).

Payne J, Welsh G, Robert J, Christ J, Nardiello J, Papazian J (2010). Observations of fatigue crack initiation in 7075-T651. Int. J. Fatigue. 32(2):247-255.

Rao B, Shin YC (2001). Analysis on high-speed face-milling of 7075-T6 aluminum using carbide and diamond cutters. Int. J. Mach. Tools Manuf. 41(12): 1763-1781

Robinson J, Tanner D, Truman C, Paradowska A, Wimpory R (2012). The influence of quench sensitivity on residual stresses in the aluminium alloys 7010 and 7075, Mater. Characterization 65:73-85.

Songmene V, Khettabi R, Zaghbani I, Kouam J, Djebara A (2006). Machining and machinability of Al Alloys. École de technologie supérieure (ÉTS). Department of Mechanical Engineering. Quebec, Canada.

Talemi H, Soori M, Abdel Wahab M, De Baets P (2011). Experimental and numerical investigation into effect of elevated temperature on fretting fatigue behavior. Sustainable Construction and Design, Soete Laboratory.

Zhao P, Tsuchida T (2009). Effect of fabrication conditions and Cr-Zr contents on the grain structure of 7075 and 6061 aluminum alloys. Mater. Sci. Eng. 499(1–2):78-82.